BT404-180°

滑入式角度铰链(二段力)
Slide-on Special-angle Hinge (Two-way)

180° | Two-way | 48 Hours salt-spray test

描述 Description

开启角度: 180°
铰杯直径: Φ35mm
铰杯深度: 11.3mm
面板 (K) 尺寸:3-7mm
可选用板厚: 14-20mm

Opening angle: 180°
Diameter of hinge cup: Φ35mm
Depth of hinge cup: 11.3mm
Door (K) dimension:3-7mm
Optional door thickness: 14-20mm

材料 Material

铰杯:铁镀镍
铰臂:铁镀镍
底座:铁镀镍

Hinge cup: Iron with nickel plating
Hinge arm: Iron with nickel plating
Hinge plate: Iron with nickel plating

订购 Order

180°

	订货号 Item no.		订货号 Item no.
有制 With spring	BT404-180°	无制 Without spring	BT404CL-180°

铰杯开孔 Drilling For Cup

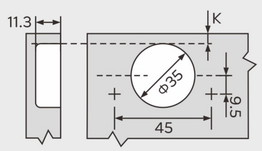

A45

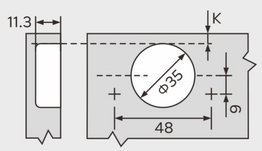

A48

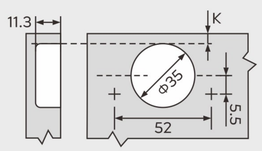

A52

配件 Accessories

	订货号 Item no.		订货号 Item no.		订货号 Item no.
M8胶粒 M8 Dowel (10, Φ8)	M8	M10胶粒 M10 Dowel (10, Φ10)	M10	欧式螺丝 Euro Screw (10.3, Φ6.3)	ES
快装胶粒 Expanding Dowel (Φ10, 10.5)	ED	木牙螺丝 Chipboard Screw (Φ4, 16, Φ8)	K4X16	双桥胶粒 Double-bridge Dowel (7.8, 32, Φ5)	S32
臂装饰盖 Arm Cap	BAC				

型号 Model.	型号 Model.	型号 Model.	型号 Model.	型号 Model.	型号 Model.
B01-HO					

注:可配的安装底座与配件,请查询263-270页。

铰链应用系统
35杯特殊角度木门标准应用

Hinge Application System
Wooden Door Standard Application For 35 Cup Special Angle Hinge

KEA祥兴

盖位计算表 Overlay Table

H= 底座高度 — H=Height of hinge base
D= 侧板上所需盖位 — D=Required overlay on side board
K= 门板外线与铰杯钻孔距离 — K=Distance between door edge and drilling holes on hinge cup
X= 安装板与侧板钻孔距离 — X=Gap between door and drilling holes on side board

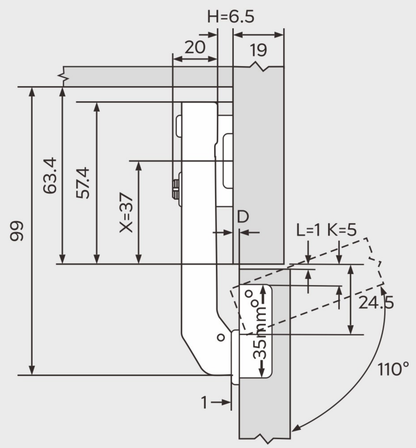

L调节量
Adjustment range of L
-2.5 ⟷ +2.0

D调节量
Adjustment range of D
-3.0 ⟷ +2.0